# M-2017

8-channel Analog Input Module

## Features

- 8-channel Differential Analog Input
- DIP Switch Selectable Voltage or Current Input
- 240 Vrms Overvoltage Protection
- Supports Fast and Normal Mode Sampling
- 4 kV ESD and EFT Protection
- Overcurrent Protection
- Individual Channel Configuration
- Dual Watchdog
- 3000 VDC Intra-Module Isolation, Field to Logic
- Wide Operating Temperature Range: -25 °C to 75 °C

## Introduction

The M-2017 is an Analog Input module that includes 8 differential Analog Input channels. The module provides a programmable input range on all Analog Input channels, and each channel can be configured for an individual input range, providing a high overvoltage protection of 240 Vrms and 50mA overcurrent protection at 110 VDC/VAC. Voltage and current input is DIP switch selectable. The sampling rate for the M-2017 module is adjustable and can be set to either fast or normal mode. The module also features per-channel open wire detection for current input of 4 to 20 mA, and provides 8 kV ESD protection, 4 kV EFT protection, 2 kV surge protection, and 3000 VDC intra-module isolation. The M-2017 module supports both the Modbus RTU and DCON protocols, which can be configured via software.

## System Specifications

| | |
|---|---|
| **Communication Interface** | |
| Interface | RS-485 |
| Bias Resistor | Yes, 1k Ω bias resistor by switch selectable |
| Format | N81, N82, E81, O81 |
| Baud Rate | 1200 to 115200 bps |
| Protocol | Modbus RTU, DCON |
| Dual Watchdog | Yes, Module (1.6 Seconds), Communication (Programmable) |
| **LED Indicators/Display** | |
| System LED Indicator | Yes, 1 as Power/Communication Indicator |
| I/O LED Indicators | - |
| 7-Segment LED Display | - |
| **Isolation** | |
| Intra-module Isolated, Field-to-Logic | 3000 VDC |
| **EMS Protection** | |
| ESD (IEC 61000-4-2) | 8 kV Contact for each terminal and 16 kV Air Random Point |
| EFT (IEC 61000-4-4) | ±4 kV for Power |
| Surge (IEC 61000-4-5) | ±2 kV for power liner |
| **Power** | |
| Reverse Polarity Protection | Yes |
| Input Voltage Range | +10 ~ +48 VDC |
| Power Consumption | 0.7 W Max |
| **Mechanical** | |
| Dimensions (W x L x H) | 33 x 110 x 96 mm |
| Installation | DIN-Rail |
| **Environment** | |
| Operating Temperature | -25 °C to +75 °C |
| Storage Temperature | -30 °C to +80 °C |
| Relative Humidity | 10 ~ 95% RH, Non-condensing |

## Applications

- Building Automation
- Factory Automation
- Machine Automation
- Remote Maintenance
- Remote Diagnosis
- Testing Equipment.

## I/O Specifications

| | | |
|---|---|---|
| **Analog Input** | | |
| Input Channels | | 8 Differential |
| Input Range | Voltage | ±150 mV, ±500 mV, ±1 V, ±5 V, ±10 V |
| | Current | ±20 mA, 0 ~ 20 mA, 4 ~ 20 mA (DIP switch selectable) |
| Resolution | | 16-bit |
| Sampling Rate | | Normal Mode: 10 Samples/Sec. (Total) |
| | | Fast Mode: 60 Samples/Sec. (Total) |
| Accuracy | | Normal Mode: ±0.1% of FSR |
| | | Fast Mode: ±0.5% of FSR |
| Common Voltage Protection | | ±200 VDC |
| Overcurrent Protection | | Yes, 50 mA at 110 VDC |
| Input Impedance | | 1 MΩ |
| Over Voltage Protection | | 240 Vrms |
| Individual Channel Configuration | | Yes |
| Connection | | 20-Pin Removable Terminal Block |

## Internal I/O Structure

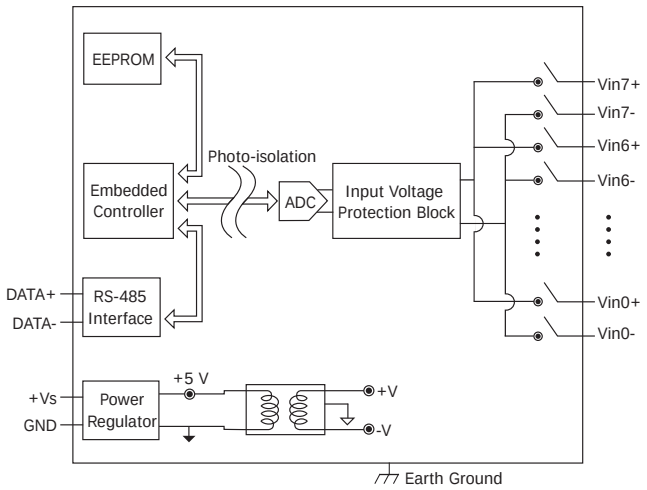


## Pin & Terminal Assignments

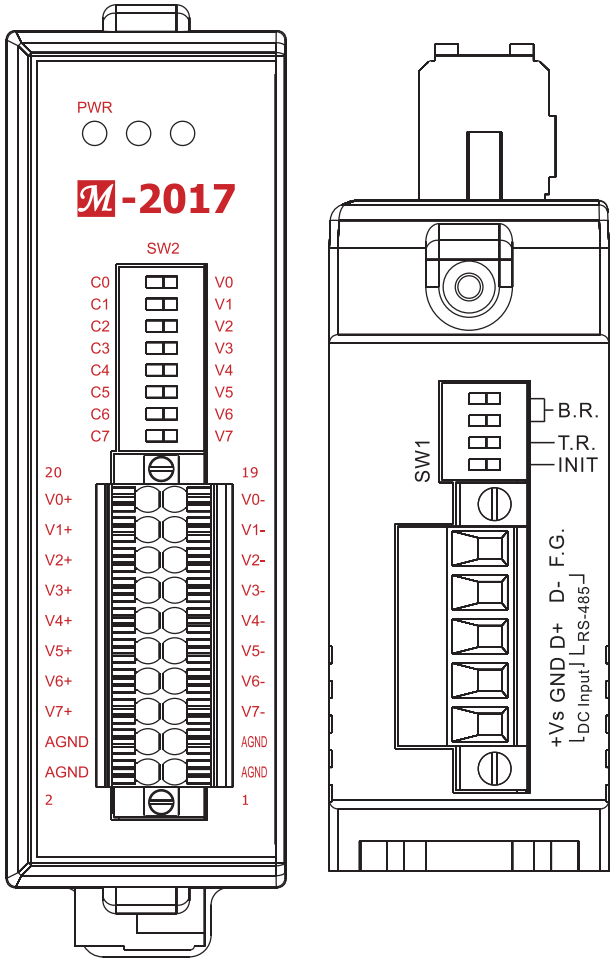


## Wire Connections

**Voltage Input Wiring**

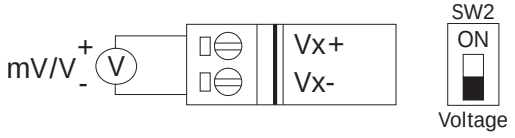


**Current Input Wiring**

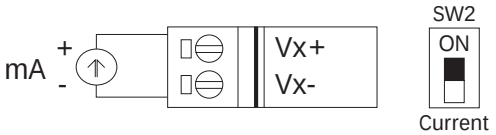


## Dimensions (Units: mm)

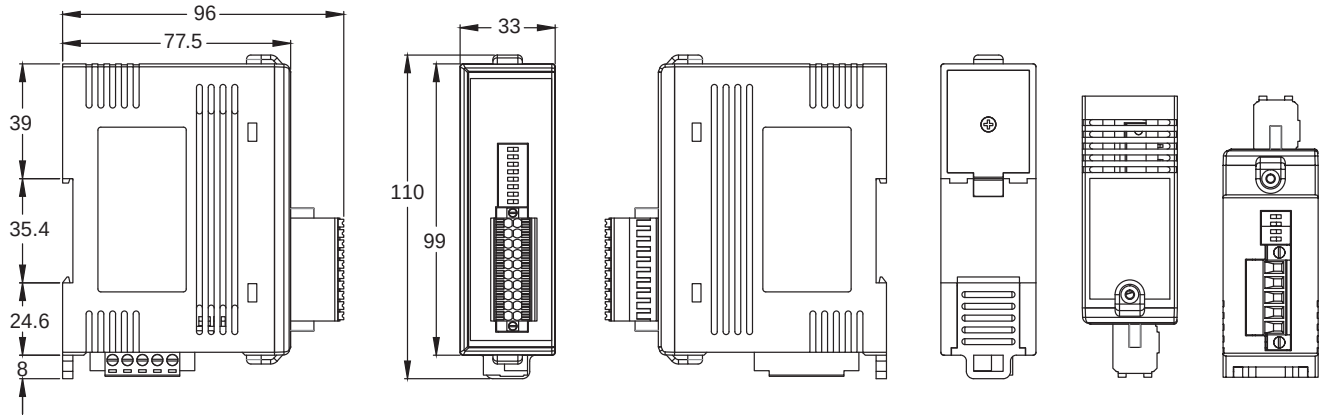


Left Side View | Front View | Right Side View | Rear View | Top View | Bottom View

## Ordering Information

| | |
|---|---|
| **M-2017 CR** | 8-channel Isolated Analog Input Module With High Voltage Protection (RoHS) |

## Accessories

| | |
|---|---|
| tM-7520U CR | RS-232 to RS-485 Converter (RoHS) |
| tM-7561 CR | USB to RS-485 Converter (RoHS) |